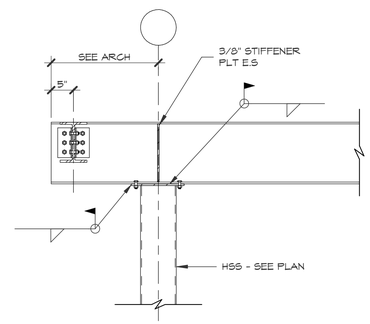

6 CANTILEVER DETAIL
SCALE: 3/4" = 1'-0"

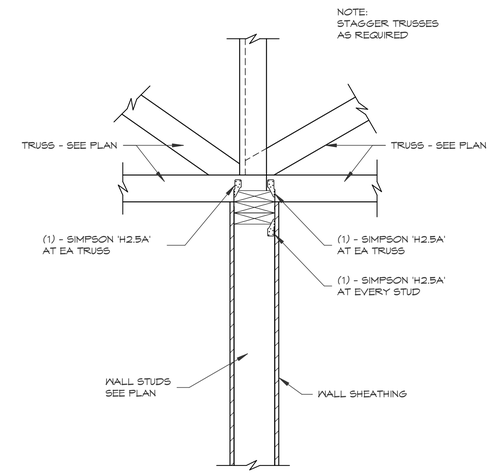

3 TYPICAL INTERIOR LOAD-BEARING WALL SUPPORTING TRUSSES
SCALE: 3/4" = 1'-0"

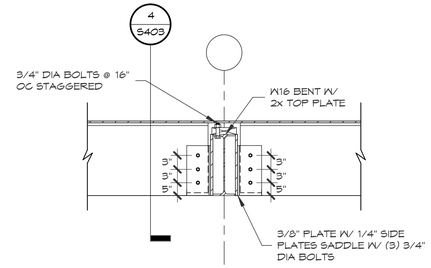

5 DETAIL AT RIDGE TO WX BENT
SCALE: 3/4" = 1'-0"

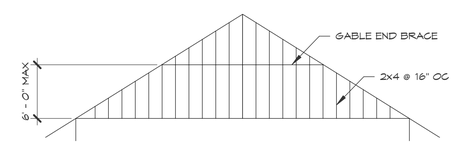

GABLE END TRUSS

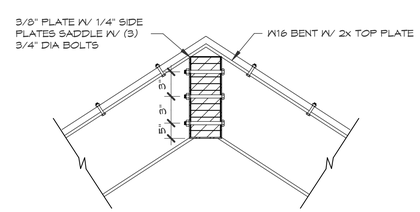

4 DETAIL AT RIDGE
SCALE: 3/4" = 1'-0"

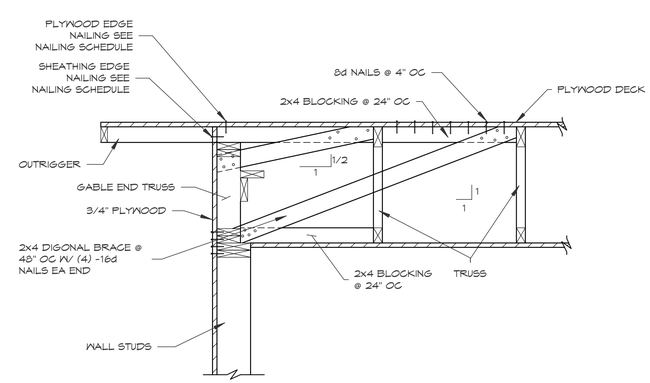

1 GABLE END DETAIL
SCALE: 3/4" = 1'-0"

SLI GROUP, INC.
ARCHITECTURE | DESIGN | CONSTRUCTION
15810 PARK TEN PLACE, SUITE 300
HOUSTON, TEXAS 77084
713-465-4650
www.sligroup.com

© COPYRIGHT

National Bank & Trust
National Bank & Trust - Bastrop
264 FM 969 BLDG. 3
BASTROP, TX 78602

Project Number : 8989

	DATE
ISSUED FOR CLIENT APPROVAL	
ISSUED FOR BIDDING	
ISSUED FOR PERMIT	09/10/26
ISSUED FOR CONSTRUCTION	

REVISIONS

MARK	DESCRIPTION	DATE

CJG ENGINEERS
STRUCTURAL ENGINNERS
TEXAS ENGINEERING FIRM
NO. F-170
6051 NORTH COURSE DRIVE
SUITE 375
HOUSTON, TEXAS 77072
713.780.3345

The information, ideas, designs, details, layouts, techniques, features, arrangements, plans, sequences, dimensions, allowances, tolerances, conceptions, specifications, intentions, technology or embodiments, as illustrated, arranged, displayed, noted, recorded, indicated, represented, disclosed, evidenced, detailed or otherwise reduced to tangible form hereon, either expressly, inherently or by implication, are the confidential and proprietary information of SLI Design, Inc., and shall not be used for any purpose other than the specific project or undertaking identified on the drawing title block or legend for which they are and have been prepared by SLI Design, Inc. Any other reproduction, disclosure or use of any portion of the confidential and proprietary information of SLI Design, Inc., shall be a breach of the obligation of confidence created by the acceptance of this drawing from SLI Design, Inc. for a specific project or Contract. Any copying, duplicating, reproducing, utilization, alteration, modification, revision or change to this drawing, is expressly prohibited unless done with the prior written consent or approval of SLI Design, Inc., and shall not be undertaken without receipt of such prior written approval. This drawing is loaned by SLI Design, Inc., for the limited purpose of complying with a specific Contract. The drawing remains the property of SLI Design, Inc., and shall be returned upon request or completion of the contract, unless specifically authorized by Contract, under which it was loaned.

PRINT DATE: 9/10/2026 12:12:23 PM

STATE OF TEXAS
BRITT GARDNER
90958
LICENSED
PROFESSIONAL ENGINEER
10 September 2026

DRAWING TITLE
FRAMING DETAILS

DRAWN BY	JM	SHEET NO.
CHECKED BY	BG	S403
APPROVED BY		

Z:\2261067 - National Bank and Trust - Bastrop\01 Revit Models - v2026\National Bank & Trust R26.rvt