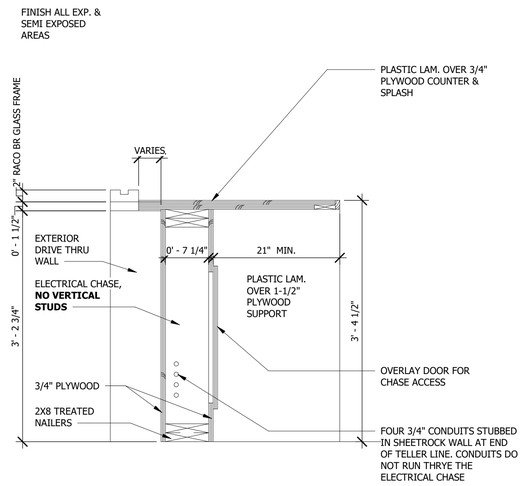

11 DRIVE THRU TELLER AT WINDOW
1" = 1'-0"

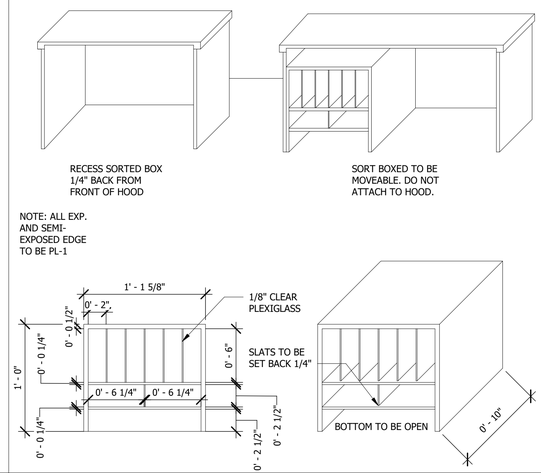

10 SORTER BOX
1 1/2" = 1'-0"

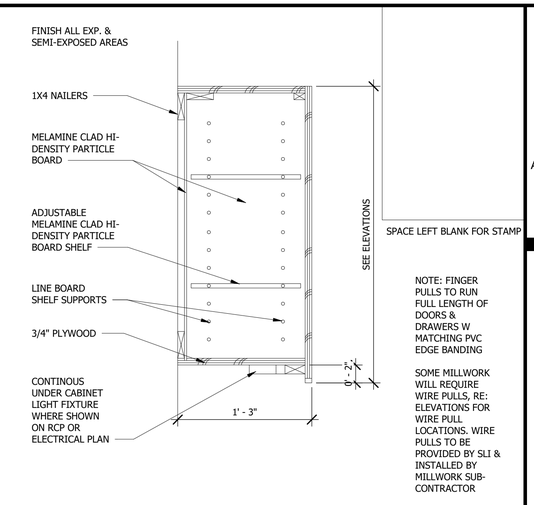

9 UPPER CABINET
1 1/2" = 1'-0"

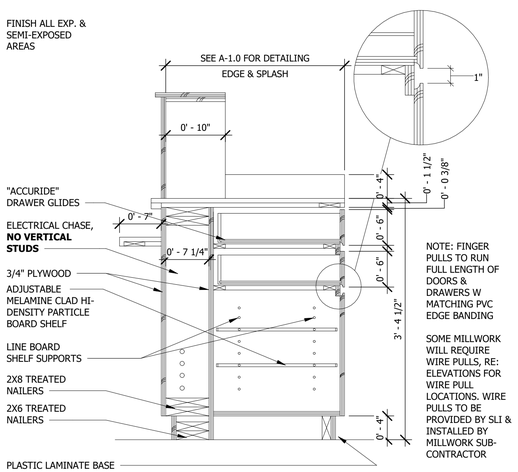

8 TELLER LINE CABINET
1" = 1'-0"

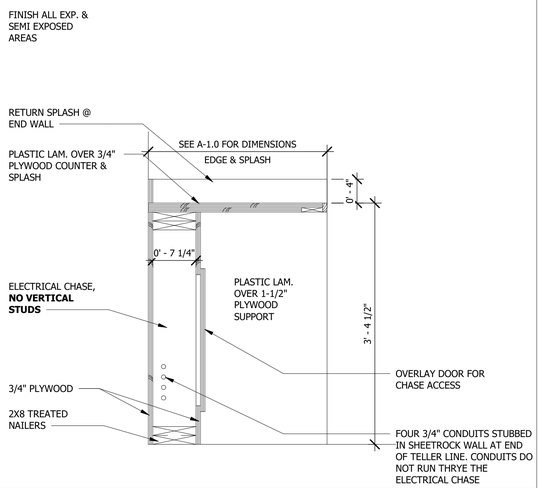

7 DRIVE THRU TELLER
1" = 1'-0"

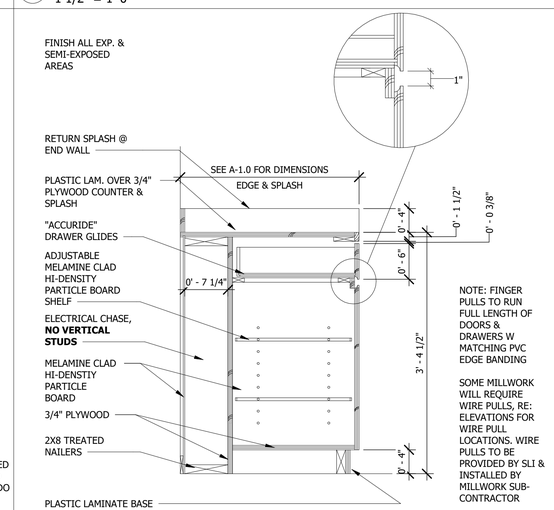

6 TELLER CABINET W CHASE
1" = 1'-0"

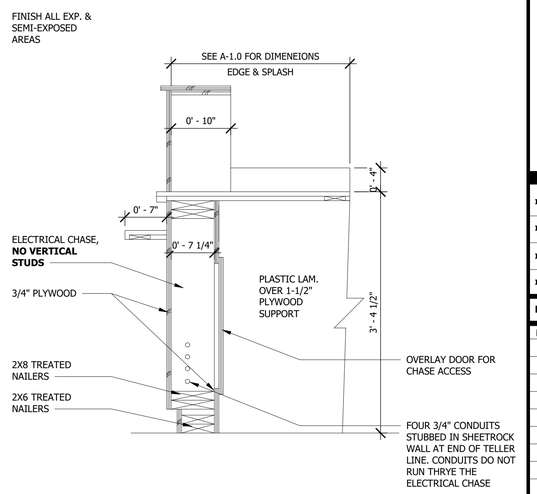

5 TELLER LINE SECTION
1" = 1'-0"

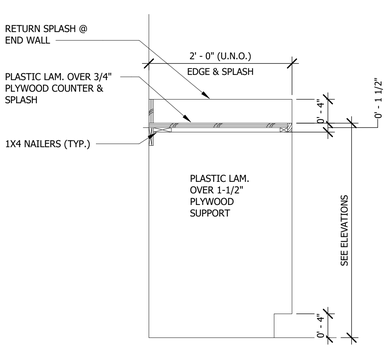

4 TYPICAL COUNTER
1" = 1'-0"

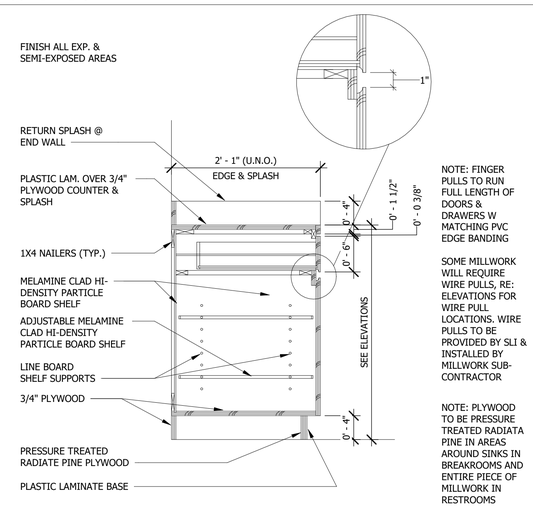

3 BASE CABINET W DRAWER
1" = 1'-0"

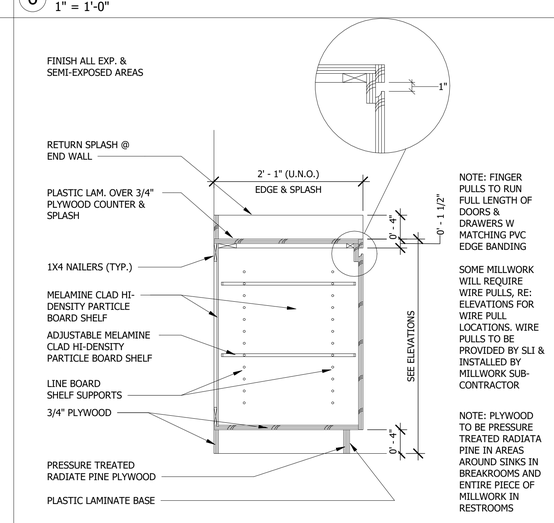

2 BASE CABINET
1" = 1'-0"

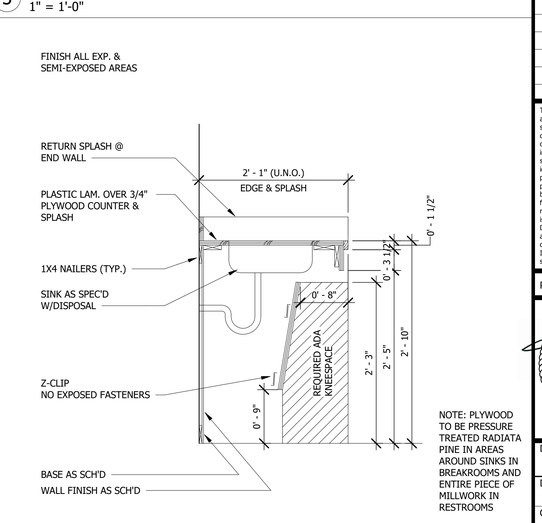

1 ADA SINK PANEL
1" = 1'-0"

SLI GROUP, INC.
ARCHITECTURE | DESIGN | CONSTRUCTION
15810 PARK TEN PLACE, SUITE 300
HOUSTON, TEXAS 77084
713-465-4650
www.sligroup.com
© COPYRIGHT

National Bank & Trust

National Bank & Trust - Bastrop
264 FM 969 BLDG. 3
BASTROP, TX 78602

Project Number : 8989

	DATE
ISSUED FOR CLIENT APPROVAL	08.17.2026
ISSUED FOR BIDDING	09.11.2026
ISSUED FOR PERMIT	09.11.2026
ISSUED FOR CONSTRUCTION	

REVISIONS

MARK	DESCRIPTION	DATE

The information, ideas, designs, details, layouts, techniques, features, arrangements, plans, sequences, dimensions, allowances, tolerances, conceptions, specifications, intentions, technology or embodiments, as illustrated, arranged, displayed, noted, recorded, indicated, represented, disclosed, evidenced, detailed or otherwise reduced to tangible form hereon, either expressly, inherently or by implication, are the confidential and proprietary information of SLI Design, Inc., and shall not be used for any purpose other than the specific project or undertaking identified on the drawing title block or legend for which they are and have been prepared by SLI Design, Inc. Any other reproduction, disclosure or use of any portion of the confidential and proprietary information of SLI Design, Inc., shall be a breach of the obligation of confidence created by the acceptance of this drawing from SLI Design, Inc. for a specific project or Contract. Any copying, duplicating, reproducing, utilization, alteration, modification, revision or change to this drawing, is expressly prohibited unless done with the prior written consent or approval of SLI Design, Inc., and shall not be undertaken without receipt of such prior written approval. This drawing is loaned by SLI Design, Inc., for the limited purpose of complying with a specific Contract. The drawing remains the property of SLI Design, Inc., and shall be returned upon request or completion of the contract, unless specifically authorized by Contract, under which it was loaned.

PRINT DATE: 9/11/2026 2:58:23 PM

REGISTERED ARCHITECT
THOMAS S. BAKER
14283
STATE OF TEXAS
09/11/26

DRAWING TITLE
MILLWORK DETAILS

DRAWN BY Author
CHECKED BY Checker
APPROVED BY Approver
SHEET NO. A-11.00

C:\Users\BrendaHughes\OneDrive - sligroup\Documents\National Bank & Trust - Bastrop, WS_V26_brhughes@sligroup.com.rvt