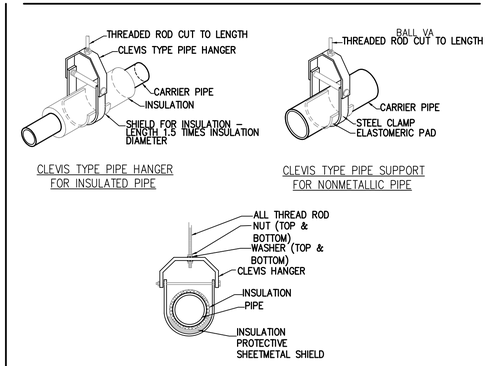

CLEVIS TYPE PIPE HANGER FOR INSULATED PIPE

CLEVIS TYPE PIPE SUPPORT FOR NONMETALLIC PIPE

TYPICAL CLEVIS HANGER DETAIL

NOTES:

1. REFER TO MANUFACTURERS SPECIFICATIONS FOR ADDITIONAL INFORMATION.
2. 16 GA. GALVANIZED SHEET STEEL SADDLE AT LEAST 12" LONG. (INSULATED LINES ONLY)
3. INSULATION WHERE SPECIFIED.

CLEVIS PIPE HANGER SUPPORT DETAIL 01

SCALE: NONE

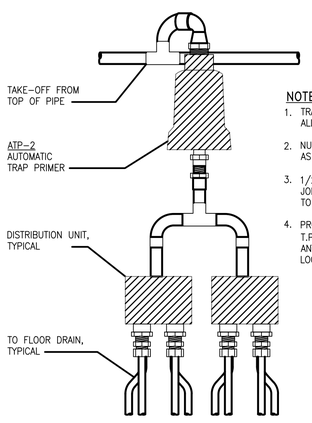

NOTES:

1. TRAP PRIMER TO BE LOCATED TO ALLOW ACCESS FOR MAINTENANCE
2. NUMBER OF DISTRIBUTION UNITS AS INDICATED ON PLAN
3. 1/2" TYPE "K" COPPER WITH NO JOINTS FROM DISTRIBUTION UNIT TO FLOOR DRAINS.
4. PROVIDE ACCESS PANEL FOR T.P.'S LOCATED INSIDE CHASES OR ANY OTHER INACCESSIBLE LOCATION

TRAP PRIMER DISTRIBUTION UNIT DETAIL 02

SCALE: NONE

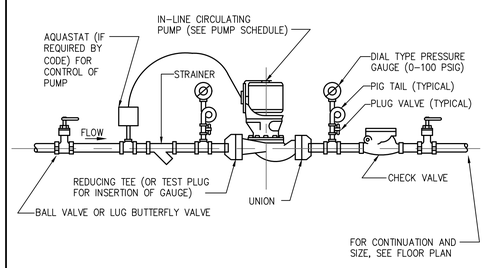

TS-1

TIME SWITCH OPERATION:

1. TIME SWITCH TO OPERATE DURING NORMAL OPERATIONS UNDER A PRESET SCHEDULE.
2. TIME SWITCH TO TURN ON AND OFF PUMP MOTORS ACCORDING TO THE SET SCHEDULE

IN-LINE CIRCULATING PUMP 03

SCALE: NONE

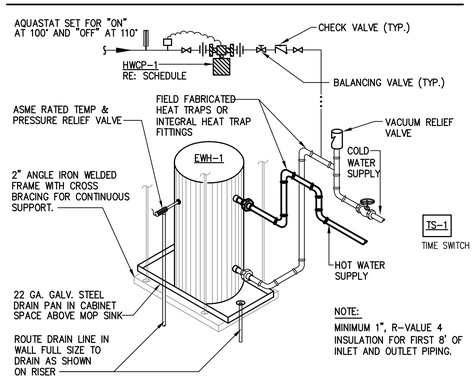

NOTE:

MINIMUM 1", R-VALUE 4 INSULATION FOR FIRST 8' OF INLET AND OUTLET PIPING.

NOTE: CONTRACTOR TO COORDINATE WITH STRUCTURAL ENGINEER FOR PROPER INSTALLATION OF ANCHORS.

ELECTRICAL WATER HEATER DETAIL 04

SCALE: NONE

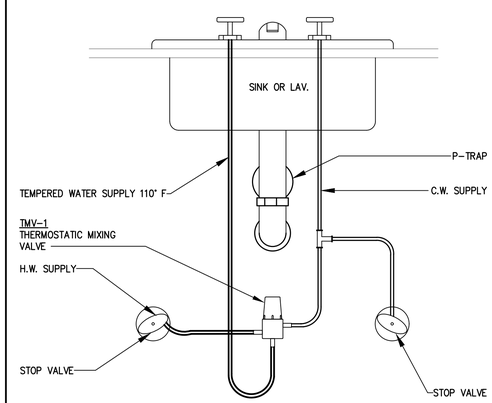

THERMOSTATIC MIXING VALVE TMV-1 05

SCALE: NONE

SLI DESIGN, INC.

ARCHITECTURE PLANNING INTERIOR DESIGN

15810 PARK TEN PLACE, SUITE 300
HOUSTON, TEXAS 77084
713-465-4650
www.sligroup.com

© COPYRIGHT

Gulf Coast Educators FEDERAL CREDIT UNION

9001 Spencer Highway

Deer Park, Texas 77571

Suites B & C

E/B/E Project Number : 26081

	DATE
ISSUED FOR CLIENT APPROVAL	06/24/2026
ISSUED FOR BIDDING	06/24/2026
ISSUED FOR PERMIT	06/24/2026
ISSUED FOR CONSTRUCTION	07/13/2026

REVISIONS

MARK	DESCRIPTION	DATE
	50% REVIEW SET	05/19/2026
	90% REVIEW SET	06/12/2026
	FINAL REVIEW SET	07/02/2026
	PERMIT SET	07/13/2026

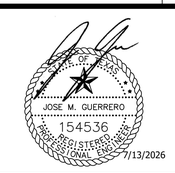

DRAWING TITLE

PLUMBING DETAILS

E/B/E CONSULTING ENGINEERS Mechanical Electrical Plumbing
12603 Southwest Frwy, Ste 170, Stafford, Tx 77477
Tel: (713) 840-0177 / Firm Reg. No: 5638

DESIGN TEAM	
P.M.:	JG
MECHANICAL:	CC
ELECTRICAL:	JG
PLUMBING:	CC
CHECKED-BY:	JG

SHEET NO.

P-3.00

P:\26081GULFCOASTEDFCUDEERPARKTX\Arch\2026-05-07 HandoffGCEFCU - Deer Park - detached for consultant.rvt