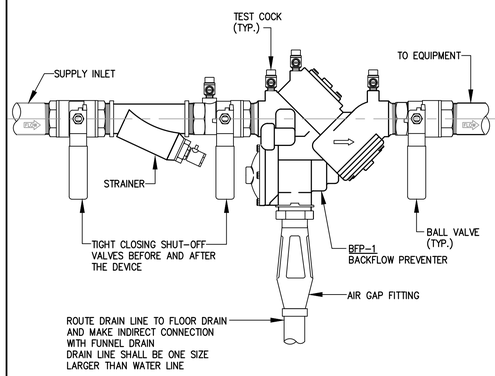

BFP-1
WATTS NO. U-909-S-HW-QT, REDUCED PRESSURE PRINCIPLE WITH NO. 909-AG-F AIR GAP FITTING. LOCATE AS CLOSE AS POSSIABLE TO FLOOR DRAIN AND MAX 48" HEIGHT

BACKFLOW PREVENTER (BFP-1) 07

SCALE: NONE

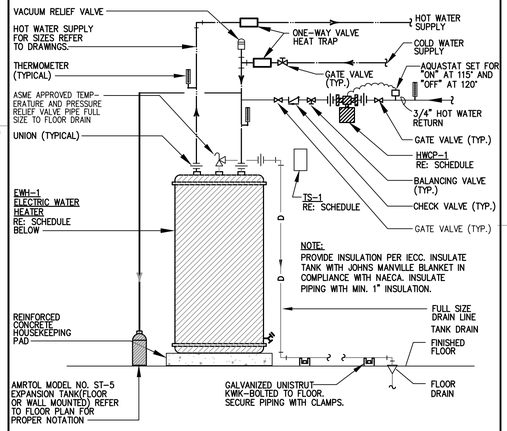

ELECTRIC WATER HEATER DETAIL 06

SCALE: NONE

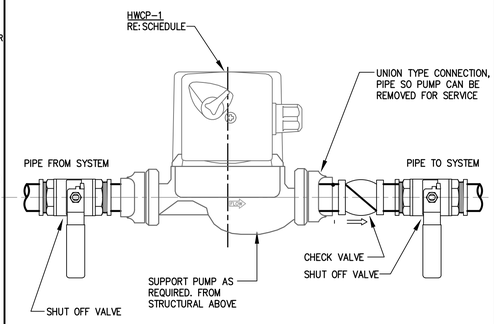

PRODUCT TO MEET OR EXCEED THE REQUIREMENTS OF CURRENT IECC MOTOR EFFICIENCY RATINGS.

IN LINE CIRCULATING PUMP - HWCP-1 04

SCALE: NONE

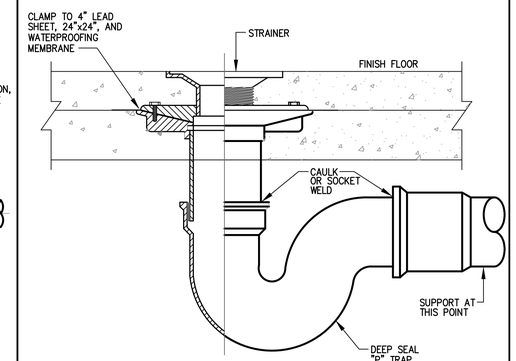

FLOOR DRAIN DETAIL FD-1 02

SCALE: NONE

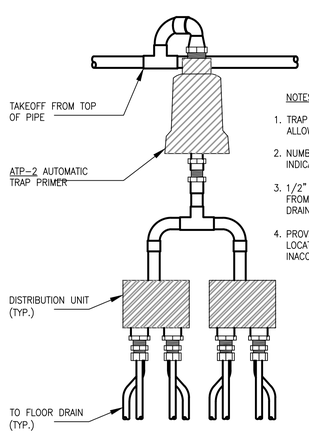

NOTES:

1. TRAP PRIMER TO BE LOCATED TO ALLOW ACCESS FOR MAINTENANCE.
2. NUMBER OF DISTRIBUTION UNITS AS INDICATED ON PLAN.
3. 1/2" TYPE "K" COPPER W/ NO JOINTS FROM DISTRIBUTION UNIT TO FLOOR DRAINS.
4. PROVIDE ACCESS PANEL FOR T.P.'S LOCATED INSIDE CHASES OR ANY OTHER INACCESSIBLE LOCATION.

TRAP PRIMER DISTRIB. UNIT DETAIL 05

SCALE: NONE

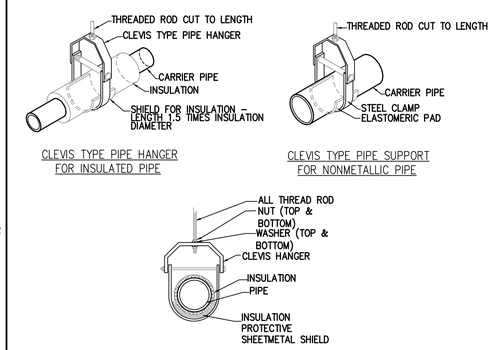

NOTES:

1. REFER TO MANUFACTURERS SPECIFICATIONS FOR ADDITIONAL INFORMATION.
2. 16 GA. GALVANIZED SHEET STEEL SADDLE AT LEAST 12" LONG. (INSULATED LINES ONLY)
3. INSULATION WHERE SPECIFIED.

CLEVIS PIPE HANGER SUPPORT DETAIL 03

SCALE: NONE

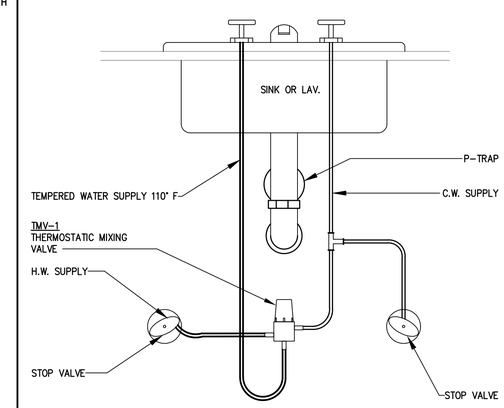

THERMOSTATIC MIXING VALVE TMV-1 01

SCALE: NONE

SCALE: N.T.S.

E|B|E CONSULTING ENGINEERS Mechanical Electrical Plumbing
12603 Southwest Frwy, Ste 170, Stafford, Tx 77477
Tel: (713) 840-0177 / Firm Reg. No: 5638

PM	MECH	ELEC	PLBG	CHCK
JG	THV	JG	BM	JG

SLI DESIGN, INC.
ARCHITECTURE PLANNING INTERIOR DESIGN
15810 PARK TEN PLACE, SUITE 300
HOUSTON, TEXAS 77084
713-465-4650
www.sligroup.com

© COPYRIGHT

BAGEL BEE

400 W. DAVIS, SUITE 110
CONROE, TX 77301

E/B/E Project Number : 26049.00

ISSUED FOR	DATE
ISSUED FOR CLIENT APPROVAL	
ISSUED FOR BIDDING	05/08/2026
ISSUED FOR PERMIT	05/08/2026
ISSUED FOR CONSTRUCTION	

REVISIONS

MARK	DESCRIPTION	DATE
	90% REVIEW SET	2026/04/07
	PERMIT AND BID SET	2026/05/08

The information, ideas, designs, details, layouts, techniques, features, arrangements, plans, sequences, dimensions, allowances, tolerances, conceptions, specifications, intentions, technology or embodiments, as illustrated, arranged, displayed, noted, recorded, indicated, represented, disclosed, evidenced, detailed or otherwise reduced to tangible form hereon, either expressly, inherently or by implication, are the confidential and proprietary information of SLI Design, Inc., and shall not be used for any purpose other than the specific project or undertaking identified on the drawing title block or legend for which they are and have been prepared by SLI Design, Inc. Any other reproduction, disclosure or use of any portion of the confidential and proprietary information of SLI Design, Inc., shall be a breach of the obligation of confidence created by the acceptance of this drawing from SLI Design, Inc. for a specific project or Contract. Any copying, duplicating, reproducing, utilization, alteration, modification, revision or change to this drawing, is expressly prohibited unless done with the prior written consent or approval of SLI Design, Inc., and shall not be undertaken without receipt of such prior written approval. This drawing is loaned by SLI Design, Inc., for the limited purpose of complying with a specific Contract. The drawing remains the property of SLI Design, Inc., and shall be returned upon request or completion of the contract, unless specifically authorized by Contract, under which it was loaned.

STATE OF TEXAS
JOSE M. GUERRERO
154536
REGISTERED PROFESSIONAL ENGINEER
05/08/2026

DRAWING TITLE
PLUMBING DETAILS

SHEET NO.
P4.01

C:\Users\rgates\Documents\00_Local Revit Files\Juanita's Restaurant\Juanita's Restaurant_VYS_V2021_rgates@sligroup.com.rvt