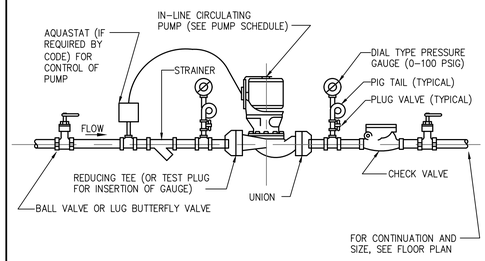

TS-1

TIME SWITCH OPERATION:

1. TIME SWITCH TO OPERATE DURING NORMAL OPERATIONS UNDER A PRESET SCHEDULE.
2. TIME SWITCH TO TURN ON AND OFF PUMP MOTORS ACCORDING TO THE SET SCHEDULE

IN-LINE CIRCULATING PUMP 01

SCALE: NONE

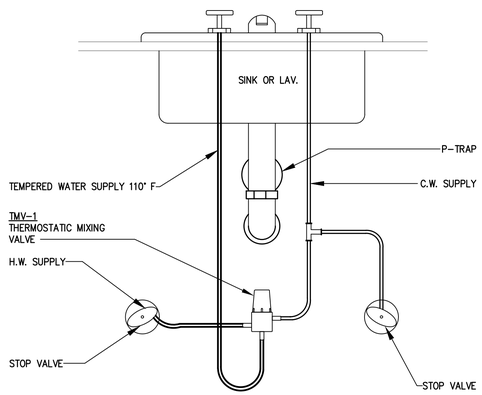

THERMOSTATIC MIXING VALVE TMV-1 02

SCALE: NONE

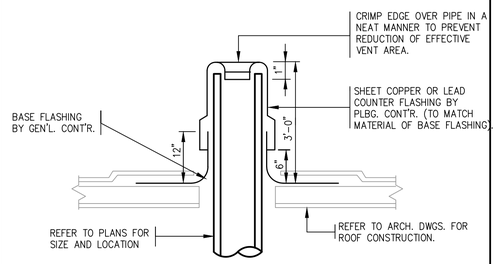

PLUMBING VENT THROUGH FLAT ROOF 03

SCALE: NONE

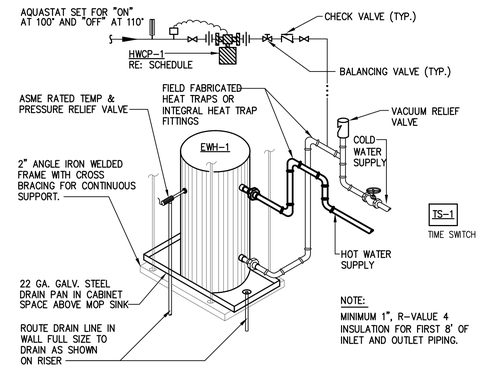

NOTE:
MINIMUM 1", R-VALUE 4 INSULATION FOR FIRST 8' OF INLET AND OUTLET PIPING.

NOTE: CONTRACTOR TO COORDINATE WITH STRUCTURAL ENGINEER FOR PROPER INSTALLATION OF ANCHORS.

CONTRACTOR TO COORDINATE WITH BUILDING MANAGEMENT TO CONNECT THE FLOOD STOPPER TO THE BAS SYSTEM.

ELECTRICAL WATER HEATER DETAIL 04

SCALE: NONE

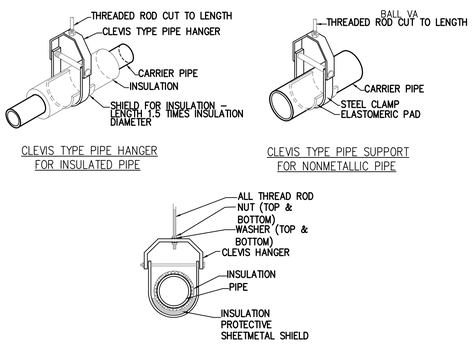

CLEVIS TYPE PIPE HANGER FOR INSULATED PIPE

CLEVIS TYPE PIPE SUPPORT FOR NONMETALLIC PIPE

TYPICAL CLEVIS HANGER DETAIL

NOTES:

1. REFER TO MANUFACTURERS SPECIFICATIONS FOR ADDITIONAL INFORMATION.
2. 16 GA. GALVANIZED SHEET STEEL SADDLE AT LEAST 12" LONG. (INSULATED LINES ONLY)
3. INSULATION WHERE SPECIFIED.

CLEVIS PIPE HANGER SUPPORT DETAIL 05

SCALE: NONE

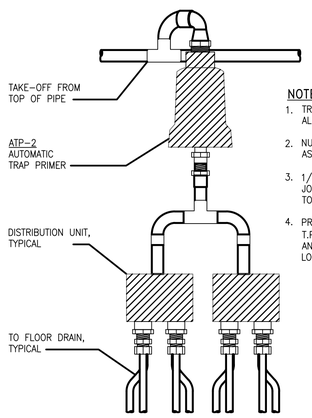

NOTES:

1. TRAP PRIMER TO BE LOCATED TO ALLOW ACCESS FOR MAINTENANCE
2. NUMBER OF DISTRIBUTION UNITS AS INDICATED ON PLAN
3. 1/2" TYPE "K" COPPER WITH NO JOINTS FROM DISTRIBUTION UNIT TO FLOOR DRAINS.
4. PROVIDE ACCESS PANEL FOR T.P.'S LOCATED INSIDE CHASES OR ANY OTHER INACCESSIBLE LOCATION

TRAP PRIMER DISTRIBUTION UNIT DETAIL 06

SCALE: NONE

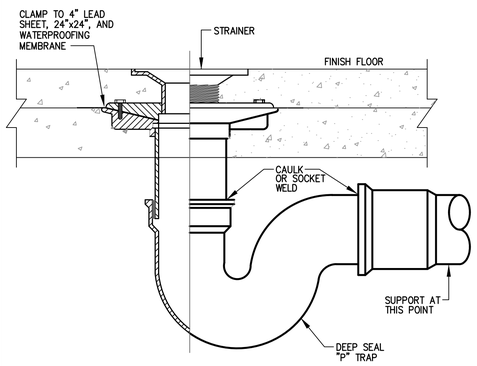

TRAP PRIMER DISTRIBUTION UNIT DETAIL 07

SCALE: NONE

SLI DESIGN, INC.
ARCHITECTURE | DESIGN | CONSTRUCTION.
15810 PARK TEN PLACE, SUITE 300
HOUSTON, TEXAS 77084
713-465-4650
www.sligroup.com

© COPYRIGHT

Sage Capital Bank

Financial Wisdom. Texas Roots.

121 S Magnolia Ave.
Luling, TX 78648

E/B/E PROJECT NUMBER: 260205.00

ISSUED FOR CLIENT APPROVAL	DATE
ISSUED FOR BIDDING	
ISSUED FOR PERMIT	04/13/2026
ISSUED FOR CONSTRUCTION	

REVISIONS

MARK	DESCRIPTION	DATE
	PERMIT SET	04/13/2026

PRINT DATE

DRAWING TITLE
PLUMBING DETAILS

SHEET NO.
P-5.00

E/B/E CONSULTING ENGINEERS
Mechanical Electrical Plumbing
12603 Southwest Frwy, Ste 170, Stafford, Tx 77477
Tel: (713) 840-0177 / Firm Reg. No: 5638

PM	SETUP	MECH	ELEC	PLBG	CHCK
JG	CC/JG	CC	JG	CC	JG