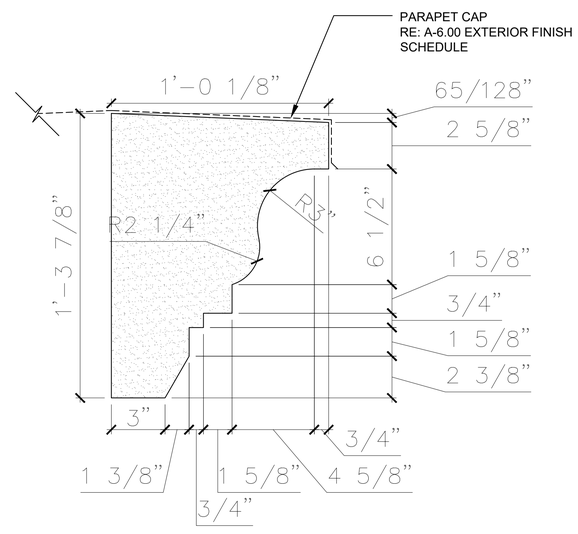

02 STUCCO MOLD B
SCALE: 3" = 1'-0"

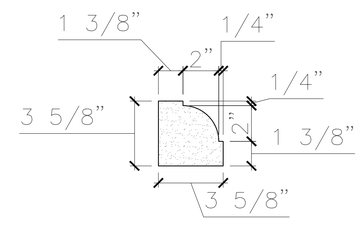

01 STUCCO MOLD A
SCALE: 3" = 1'-0"

SLI DESIGN, INC.
ARCHITECTURE PLANNING INTERIOR DESIGN
15810 PARK TEN PLACE, SUITE 300
HOUSTON, TEXAS 77084
713-465-4650
www.sligroup.com
© COPYRIGHT

Sage Capital Bank
Financial Wisdom. Texas Roots.

121 S Magnolia Ave.
Luling, TX 78648

PROJECT NUMBER : 8977

ISSUED FOR CLIENT APPROVAL	DATE
ISSUED FOR BIDDING	04.14.26
ISSUED FOR PERMIT	04.14.26
ISSUED FOR CONSTRUCTION	

REVISIONS

MARK	DESCRIPTION	DATE

The information, ideas, designs, details, layouts, techniques, features, arrangements, plans, sequences, dimensions, allowances, tolerances, conceptions, specifications, intentions, technology or embodiments, as illustrated, arranged, displayed, noted, recorded, indicated, represented, disclosed, evidenced, detailed or otherwise reduced to tangible form hereon, either expressly, inherently or by implication, are the confidential and proprietary information of SLI Design, Inc., and shall not be used for any purpose other than the specific project or undertaking identified on the drawing title block or legend for which they are and have been prepared by SLI Design, Inc. Any other reproduction, disclosure or use of any portion of the confidential and proprietary information of SLI Design, Inc., shall be a breach of the obligation of confidence created by the acceptance of this drawing from SLI Design, Inc. for a specific project or Contract. Any copying, duplicating, reproducing, utilization, alteration, modification, revision or change to this drawing, is expressly prohibited unless done with the prior written consent or approval of SLI Design, Inc., and shall not be undertaken without receipt of such prior written approval. This drawing is loaned by SLI Design, Inc., for the limited purpose of complying with a specific Contract. The drawing remains the property of SLI Design, Inc., and shall be returned upon request or completion of the contract, unless specifically authorized by Contract, under which it was loaned.

PRINT DATE Apr 14, 2026 – 9:07am

REGISTERED ARCHITECT TRASE BRYAN TEAGUE 16288 STATE OF TEXAS
04.14.26

DRAWING TITLE
STUCCO MOLD DETAILS

DRAWN BY	CM	SHEET NO.
CHECKED BY	TB	A-9.00
APPROVED BY	TB	